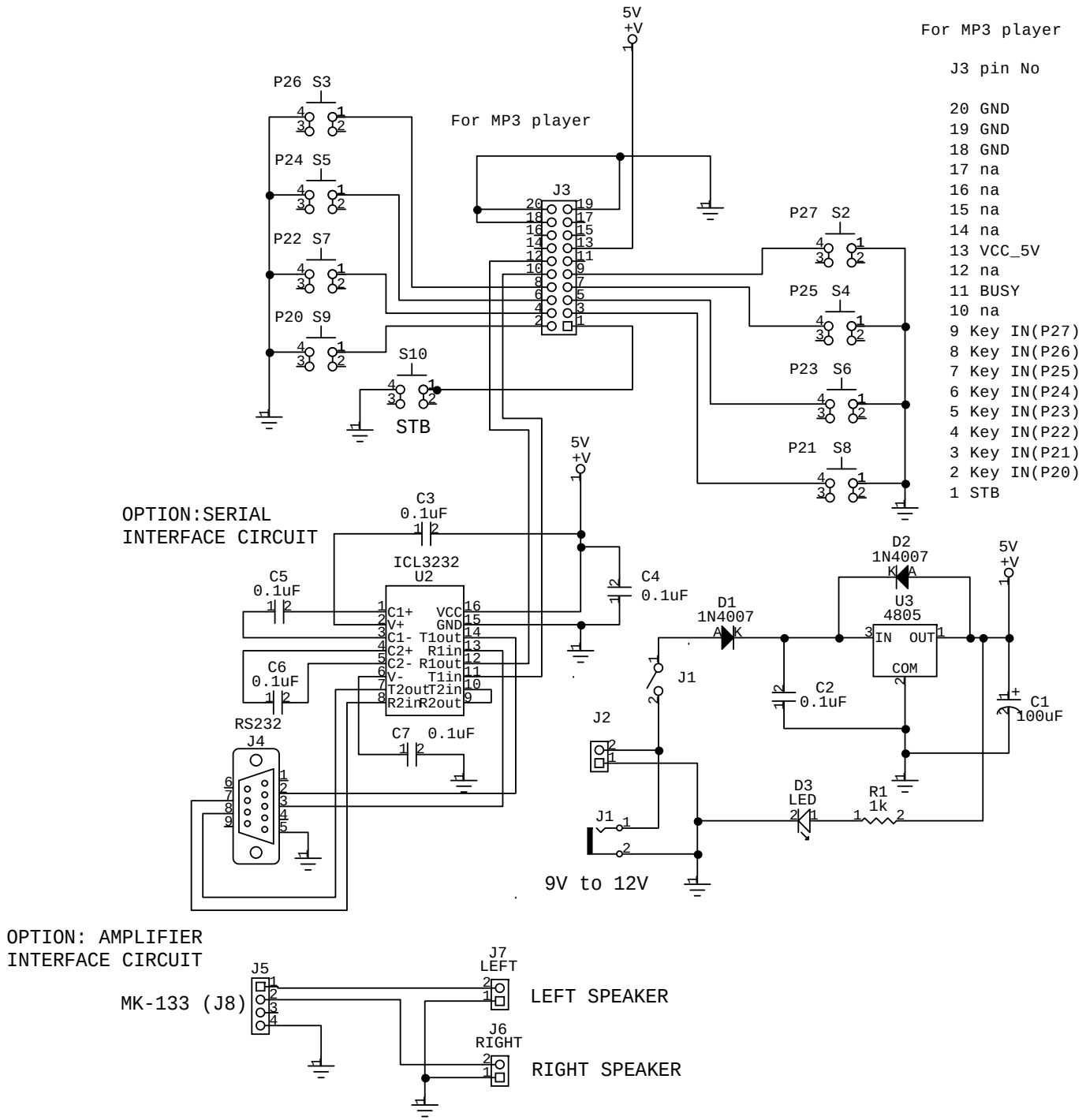
5V
+V
For MP3 player
J3 pin No
20 GND
19 GND
18 GND
17 na
16 na
15 na
14 na
13 VCC_5V
12 na
11 BUSY
10 na
9 Key IN(P27)
8 Key IN(P26)
7 Key IN(P25)
6 Key IN(P24)
5 Key IN(P23)
4 Key IN(P22)
3 Key IN(P21)
2 Key IN(P20)
1 STB
P26 S3
P24 S5
P22 S7
P20 S9
S10
STB
J3
P27 S2
P25 S4
P23 S6
P21 S8
OPTION:SERIAL
INTERFACE CIRCUIT
C3
0.1uF
C4
0.1uF
C5
0.1uF
C6
0.1uF
ICL3232
U2
C1+ VCC
V+ GND
C1- T1out
C2+ R1in
C2- R1out
V- T1in
T2out T2in
R2in R2out
C7 0.1uF
RS232
J4
D1
1N4007
D2
1N4007
U3
4805
IN OUT
COM
C2
0.1uF
C1
100uF
J1
J2
D3
LED
R1
1k
9V to 12V
OPTION: AMPLIFIER
INTERFACE CIRCUIT
MK-133 (J8)
J5
J7
LEFT
LEFT SPEAKER
J6
RIGHT
RIGHT SPEAKER